SIEMENS

Data sheet 3RA2327-8XB30-1AC2

reversing contactor assembly, AC-3e/AC-3, 32 A, 15 kW / 400 V, 3-pole, 24 V AC, 50/60 Hz, screw terminal, electrical and mechanical interlock, auxiliary contacts: 2 x 1 NO

product brand name	SIRIUS
product designation	Reversing contactor assembly
product type designation	3RA23
manufacturer's article number	
● 1 of the supplied contactor	3RT2027-1AC20
● 2 of the supplied contactor	3RT2027-1AC20
● of the supplied RH assembly kit	3RA2923-2AA1
General technical data	
size of contactor	S0
product extension auxiliary switch	Yes
shock resistance at rectangular impulse	
● at AC	8,3g / 5 ms, 5,3g / 10 ms
● at DC	10g / 5 ms, 7,5g / 10 ms
shock resistance with sine pulse	
● at AC	13,5g / 5 ms, 8,3g / 10 ms
● at DC	15g / 5 ms, 10g / 10 ms
mechanical service life (operating cycles)	
● of contactor typical	10 000 000
● of the contactor with added auxiliary switch block typical	10 000 000
reference code according to IEC 81346-2	Q
Substance Prohibitance (Date)	10/01/2009
Ambient conditions	
installation altitude at height above sea level maximum	2 000 m
ambient temperature	
● during operation	-25 ... +60 °C
● during storage	-55 ... +80 °C
Main circuit	
number of poles for main current circuit	3
number of NO contacts for main contacts	3
number of NC contacts for main contacts	0
operating voltage	
● at AC-3 rated value maximum	690 V
● at AC-3e rated value maximum	690 V
operational current	
● at AC-3	
— at 400 V rated value	32 A
— at 500 V rated value	32 A
— at 690 V rated value	21 A
● at AC-3e	
— at 400 V rated value	32 A

Subject to change without notice
© Copyright Siemens

— at 500 V rated value	32 A
— at 690 V rated value	21 A
operating power	
● at AC-3	
— at 400 V rated value	15 kW
— at 500 V rated value	15 kW
— at 690 V rated value	18.5 kW
● at AC-3e	
— at 400 V rated value	15 kW
— at 690 V rated value	18.5 kW
● at AC-4 at 400 V rated value	11 kW
operating frequency	
● at AC-3 maximum	750 1/h
● at AC-3e maximum	750 1/h
Control circuit/ Control	
type of voltage of the control supply voltage	AC
control supply voltage 1 at AC	
● at 50 Hz rated value	24 V
● at 60 Hz rated value	24 V
operating range factor control supply voltage rated value of magnet coil at AC	
● at 50 Hz	0.8 ... 1.1
● at 60 Hz	0.8 ... 1.1
apparent pick-up power of magnet coil at AC	
● at 50 Hz	77 VA
inductive power factor with closing power of the coil	
● at 50 Hz	0.82
apparent holding power of magnet coil at AC	
● at 50 Hz	9.8 VA
inductive power factor with the holding power of the coil	
● at 50 Hz	0.27
Auxiliary circuit	
number of NO contacts for auxiliary contacts	
● per direction of rotation	1
● instantaneous contact	2
contact reliability of auxiliary contacts	< 1 error per 100 million operating cycles
UL/CSA ratings	
full-load current (FLA) for 3-phase AC motor	
● at 480 V rated value	27 A
● at 600 V rated value	27 A
yielded mechanical performance [hp] for 3-phase AC motor	
● at 220/230 V rated value	10 hp
● at 460/480 V rated value	20 hp
● at 575/600 V rated value	25 hp
contact rating of auxiliary contacts according to UL	A600 / Q600
Short-circuit protection	
design of the fuse link	
● for short-circuit protection of the main circuit	
— with type of coordination 1 required	gG NH 3NA, DIAZED 5SB, NEOZED 5SE: 125 A
— with type of assignment 2 required	gG NH 3NA, DIAZED 5SB, NEOZED 5SE: 50 A
● for short-circuit protection of the auxiliary switch required	fuse gG: 10 A
Installation/ mounting/ dimensions	
mounting position	+/-180° rotation possible on vertical mounting surface; can be tilted forward and backward by +/- 22.5° on vertical mounting surface
fastening method	screw and snap-on mounting onto 35 mm DIN rail
height	101 mm
width	90 mm
depth	97 mm
required spacing	
● with side-by-side mounting	
— forwards	6 mm

Subject to change without notice
© Copyright Siemens

— backwards	0 mm
— upwards	6 mm
— downwards	6 mm
— at the side	6 mm
● for grounded parts	
— forwards	6 mm
— backwards	0 mm
— upwards	6 mm
— at the side	6 mm
— downwards	6 mm
● for live parts	
— forwards	6 mm
— backwards	0 mm
— upwards	6 mm
— downwards	6 mm
— at the side	6 mm
Connections/ Terminals	
type of electrical connection	
● for main current circuit	screw-type terminals
● for auxiliary and control circuit	screw-type terminals
● at contactor for auxiliary contacts	Screw-type terminals
● of magnet coil	Screw-type terminals
type of connectable conductor cross-sections for main contacts	
● solid	2x (1 ... 2.5 mm²), 2x (2.5 ... 10 mm²)
● solid or stranded	2x (1 ... 2.5 mm²), 2x (2.5 ... 10 mm²)
● finely stranded with core end processing	2x (1 ... 2.5 mm²), 2x (2.5 ... 6 mm²), 1x 10 mm²
type of connectable conductor cross-sections	
● for auxiliary contacts	
— solid or stranded	2x (0.5 ... 1.5 mm²), 2x (0.75 ... 2.5 mm²)
— finely stranded with core end processing	2x (0.5 ... 1.5 mm²), 2x (0.75 ... 2.5 mm²)
● for AWG cables for auxiliary contacts	2x (20 ... 16), 2x (18 ... 14)
Safety related data	
proportion of dangerous failures	
● with low demand rate according to SN 31920	40 %
● with high demand rate according to SN 31920	75 %
B10 value with high demand rate according to SN 31920	1 000 000
failure rate [FIT] with low demand rate according to SN 31920	100 FIT
IEC 61508	
T1 value	
● for proof test interval or service life according to IEC 61508	20 a
Electrical Safety	
protection class IP on the front according to IEC 60529	IP20
touch protection on the front according to IEC 60529	finger-safe, for vertical contact from the front
Communication/ Protocol	
product function bus communication	Yes
protocol is supported AS-Interface protocol	No
product function control circuit interface with IO link	No
Approvals Certificates	
General Product Approval	

Confirmation

Test Certificates	**Marine / Shipping**

Subject to change without notice
© Copyright Siemens

Special Test Certificate	ABS	BUREAU VERITAS	DNV	LRS	PRS

Marine / Shipping		other	Railway	Environment
RINA	RMRS	Confirmation	Special Test Certificate	Environmental Confirmations

Further information

Information on the packaging
https://support.industry.siemens.com/cs/ww/en/view/109813875
Information- and Downloadcenter (Catalogs, Brochures,…)
https://www.siemens.com/ic10
Industry Mall (Online ordering system)
https://mall.industry.siemens.com/mall/en/en/Catalog/product?mlfb=3RA2327-8XB30-1AC2
Cax online generator
http://support.automation.siemens.com/WW/CAXorder/default.aspx?lang=en&mlfb=3RA2327-8XB30-1AC2
Service&Support (Manuals, Certificates, Characteristics, FAQs,...)
https://support.industry.siemens.com/cs/ww/en/ps/3RA2327-8XB30-1AC2
Image database (product images, 2D dimension drawings, 3D models, device circuit diagrams, EPLAN macros, ...)
http://www.automation.siemens.com/bilddb/cax_de.aspx?mlfb=3RA2327-8XB30-1AC2&lang=en
Characteristic: Tripping characteristics, I²t, Let-through current
https://support.industry.siemens.com/cs/ww/en/ps/3RA2327-8XB30-1AC2/char
Further characteristics (e.g. electrical endurance, switching frequency)
http://www.automation.siemens.com/bilddb/index.aspx?view=Search&mlfb=3RA2327-8XB30-1AC2&objecttype=14&gridview=view1

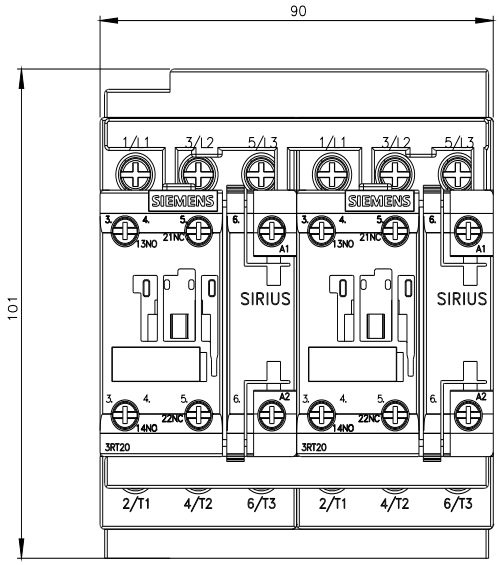

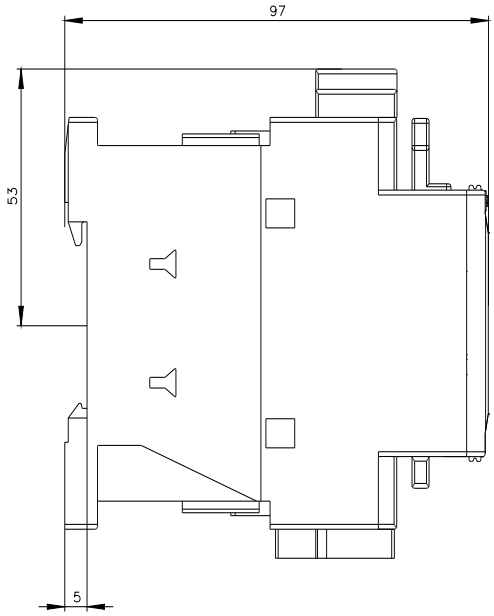

Subject to change without notice
© Copyright Siemens

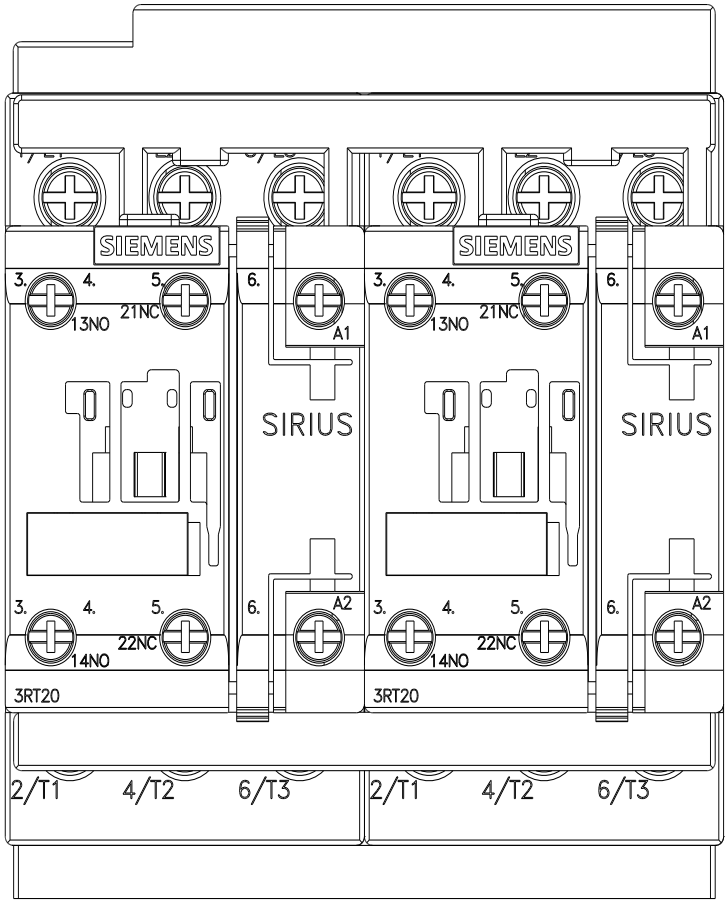

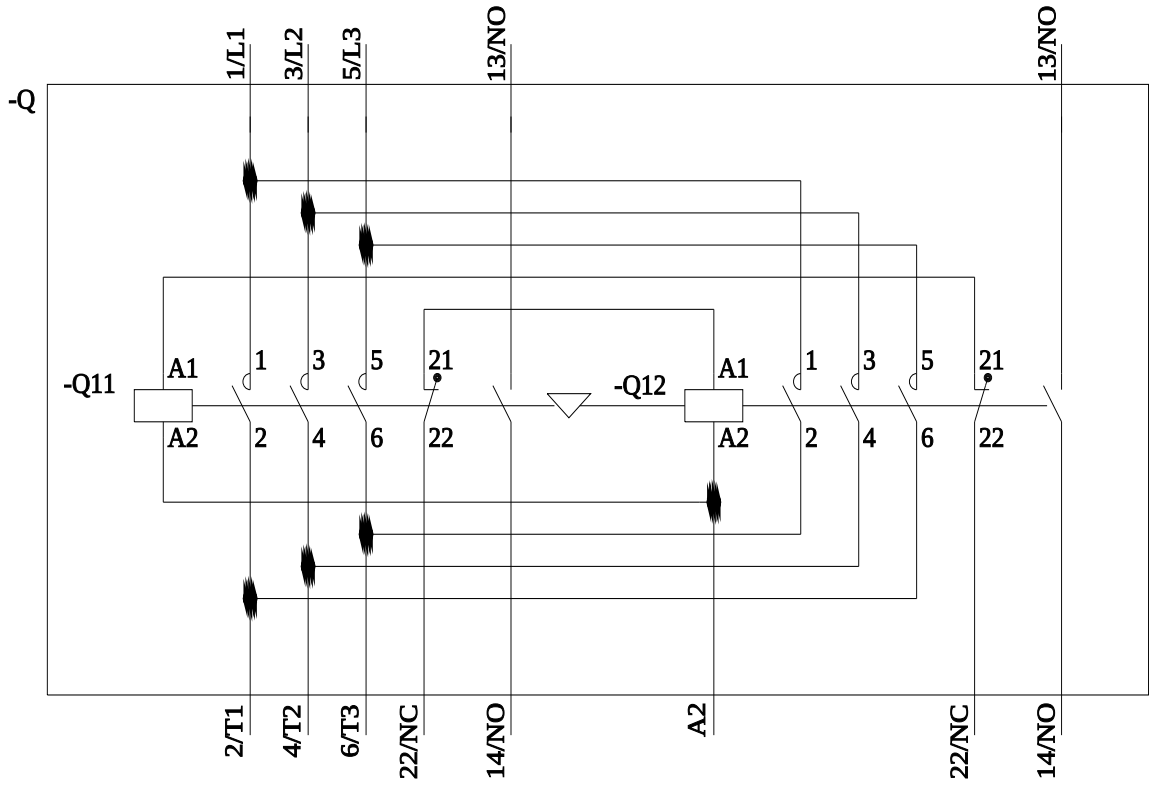

last modified: 11/21/2022

Subject to change without notice
© Copyright Siemens